National Semiconductor

March 12, 2010

LM3497

Triac Dimmable Offline LED Driver

General Description

The LM3497 is an adaptive constant off-time AC/DC buck (step-down) constant current controller designed to be compatible with triac dimmers. The LM3497 provides a constant current for illuminating high power LEDs and includes a triac dim decoder. The dim decoder allows wide range LED dimming using standard triac dimmers. The high frequency capable architecture allows the use of small external passive components. The LM3497 includes a bleeder circuit to ensure proper triac operation by allowing current flow while the line voltage is low to enable proper firing of the triac. A passive PFC circuit ensures good power factor by drawing current directly from the line for most of the cycle, and provides a constant positive voltage to the buck regulator. Additional features include thermal shutdown, current limit and V_{CC} under-voltage lockout.

Features

- Triac dim decoder circuit for LED dimming
- Application voltage range $80V_{AC} – 277V_{AC}$
- Capable of controlling LED currents greater than 1A
- Adjustable switching frequency
- Low quiescent current
- Adaptive programmable off-time allows for constant ripple current
- Thermal shutdown
- No 120Hz flicker
- Low profile 10 pin MSOP Package or 14 pin SOIC
- Patent pending drive architecture

Applications

- Retro Fit Triac Dimming
- Solid State Lighting
- Industrial and Commercial Lighting
- Residential Lighting

Typical LM3497 LED Driver Application Circuit

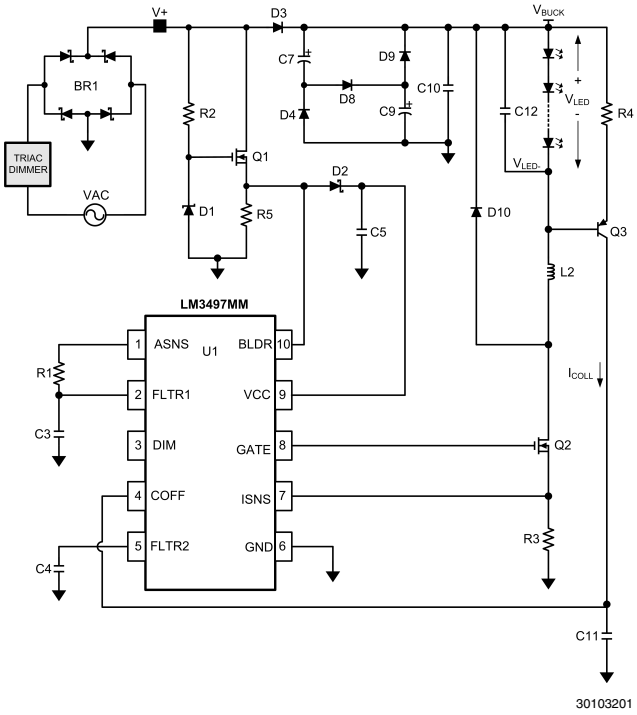

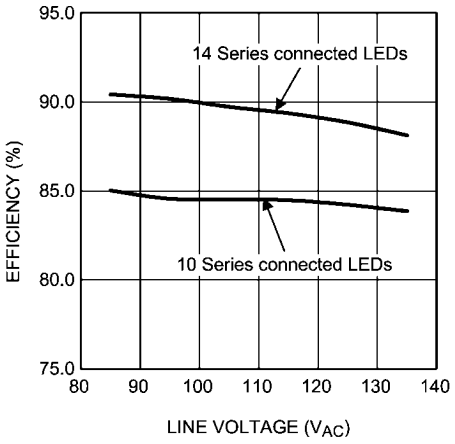

© 2010 National Semiconductor Corporation

Connection Diagrams

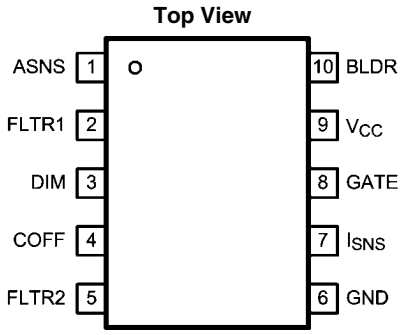

10-Pin MSOP
NS Package Number MUB10A

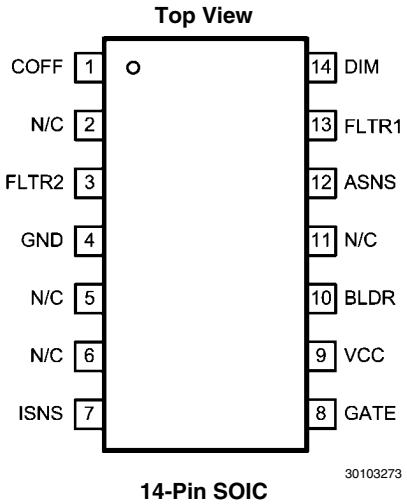

14-Pin SOIC
NS Package Number M14A

Ordering Information

Order Number	Spec.	Package Type	NSC Package Drawing	Top Mark	Supplied As
LM3497MM	NOPB	MSOP-10	MUB10A	SZBB	1000 Units, Tape and Reel
LM3497MMX	NOPB	MSOP-10	MUB10A	SZBB	3500 Units, Tape and Reel
LM3497M	NOPB	SOIC-14L	M14A	LM3497M	55 Units, Rail
LM3497MX	NOPB	SOIC-14L	M14A	LM3497M	2500 Units, Tape and Reel

Pin Descriptions

SOIC	MSOP	Name	Description
12	1	ASNS	PWM output of the triac dim decoder circuit. Outputs a 0 to 4V PWM signal with a duty cycle proportional to the triac dimmer on-time.
13	2	FLTR1	First filter input. The 120Hz PWM signal from ASNS is filtered to a DC signal and compared to a 1 to 3V, 5.85 kHz ramp to generate a higher frequency PWM signal with a duty cycle proportional to the triac dimmer firing angle. Pull above 4.9V (typical) to tri-state DIM.
14	3	DIM	Input/output dual function dim pin. This pin can be driven with an external PWM signal to dim the LEDs. It may also be used as an output signal and connected to the DIM pin of other LM3497 or LED drivers to dim multiple LED circuits simultaneously.
1	4	COFF	OFF time setting pin. A user set current and capacitor connected from the output to this pin sets the constant OFF time of the switching controller.
3	5	FLTR2	Second filter input. A capacitor tied to this pin filters the PWM dimming signal to supply a DC voltage to control the LED current. Could also be used as an analog dimming input.
4	6	GND	Circuit ground connection.
7	7	ISNS	LED current sense pin. Connect a resistor from main switching MOSFET source, ISNS to GND to set the maximum LED current.
8	8	GATE	Power MOSFET driver pin. This output provides the gate drive for the power switching MOSFET of the buck controller.
9	9	V_{CC}	Input voltage pin. This pin provides the power for the internal control circuitry and gate driver.
10	10	BLDR	Bleeder pin. Provides the input signal to the angle detect circuitry as well as a current path through a switched 230Ω resistor to ensure proper firing of the triac dimmer.
2,5,6,11	-	N/C	No Connect

Absolute Maximum Ratings (*Note 1*)

If Military/Aerospace specified devices are required, please contact the National Semiconductor Sales Office/ Distributors for availability and specifications.

BLDR to GND	-0.3V to +17V
V_{CC}, GATE, FLTR1 to GND	-0.3V to +14V
ISNS to GND	-0.3V to +2.5V
ASNS, DIM, FLTR2, COFF to GND	-0.3V to +7.0V
COFF Input Current	100mA
Continuous Power Dissipation (*Note 2*)	Internally Limited
ESD Susceptibility	
HBM (*Note 3*)	2 kV
Junction Temperature (T_{J-MAX})	150°C
Storage Temperature Range	-65°C to +150°C
Maximum Lead Temp. Range (Soldering)	260°C

Operating Conditions

V_{CC}	8.0V to 12V
Junction Temperature	−40°C to +125°C

Electrical Characteristics

Limits in standard type face are for T_J = 25°C and those with **boldface type** apply over the full **Operating Temperature Range** (T_J = −40°C to +125°C). Minimum and Maximum limits are guaranteed through test, design, or statistical correlation. Typical values represent the most likely parametric norm at T_J = +25 °C, and are provided for reference purposes only.

Symbol	Parameter	Conditions	Min	Typ	Max	Units
BLEEDER						
R_{BLDR}	Bleeder resistance to GND	I_{BLDR} = 10mA		230	**325**	Ω
V_{CC} SUPPLY						
I_{VCC}	Operating supply current			2.00	**2.85**	mA
$V_{CC-UVLO}$	Rising threshold			7.4	**7.7**	V
	Falling threshold		**6.0**	6.4		
	Hysterisis			1		
COFF						
V_{COFF}	Time out threshold		**1.225**	1.276	**1.327**	V
R_{COFF}	Off timer sinking impedance			33	**60**	Ω
t_{COFF}	Restart timer			180		µs
CURRENT LIMIT						
V_{ISNS}	ISNS limit threshold		**1.174**	1.269	**1.364**	V
t_{ISNS}	Leading edge blanking time			125		ns
	Current limit reset delay			180		µs
	ISNS limit to GATE delay	ISNS = 0 to 1.75V step		33		ns
INTERNAL PWM RAMP						
f_{RAMP}	Frequency			5.85		kHz
V_{RAMP}	Valley voltage		**0.96**	1.00	**1.04**	V
	Peak voltage		**2.85**	3.00	**3.08**	
D_{RAMP}	Maximum duty cycle		**96.5**	98.0		%
DIM DECODER						
t_{ANG_DET}	Angle detect rising threshold	Observed on BLDR pin	**6.79**	7.21	**7.81**	V
V_{ASNS}	ASNS filter delay			4		µs
	ASNS VMAX		**3.85**	4.00	**4.15**	V
I_{ASNS}	ASNS drive capability sink	V_{ASNS} = 2V		7.6		mA
	ASNS drive capability source	V_{ASNS} = 2V		-4.3		
	DIM low sink current	V_{DIM} = 1V	**1.65**	2.80		
	DIM High source current	V_{DIM} = 4V		-4.00	**-3.00**	
V_{DIM}	DIM low voltage	PWM input voltage threshold	**0.9**	1.33		V
	DIM high voltage			2.33	**3.15**	
V_{TSTH}	Tri-state threshold voltage	Apply to FLTR1 pin		4.87	**5.25**	V
R_{DIM}	DIM comparator tri-state impedance		**10**			MΩ

Symbol	Parameter	Conditions	Min	Typ	Max	Units
CURRENT SENSE COMPARATOR						
V_{FLTR2}	FLTR2 open circuit voltage		**720**	750	**780**	mV
R_{FLTR2}	FLTR2 impedance			420		kΩ
V_{OS}	Current sense comparator offset voltage		**-4.0**	0.1	**4.0**	mV
GATE DRIVE OUTPUT						
V_{DRVH}	GATE high saturation	I_{GATE} = 50 mA		0.24	**0.50**	V
V_{DRVL}	GATE low saturation	I_{GATE} = 100 mA		0.22	**0.50**	
I_{DRV}	Peak souce current	GATE = $V_{CC}/2$		-0.77		A
	Peak sink current	GATE = $V_{CC}/2$		0.88		
t_{DV}	Rise time	C_{load} = 1 nF		15		ns
	Fall time	C_{load} = 1 nF		15		
THERMAL SHUTDOWN						
T_{SD}	Thermal shutdown temperature	(*Note 4*)		165		°C
	Thermal shutdown hysteresis			20		
THERMAL SHUTDOWN						
$R_{\theta JA}$	MSOP-10 junction to ambient			121		°C/W

Note 1: Absolute maximum ratings are limits beyond which damage to the device may occur. Operating Ratings are conditions for which the device is intended to be functional, but device parameter specifications may not be guaranteed. For guaranteed specifications and test conditions, see the Electrical Characteristics. All voltages are with respect to the potential at the GND pin, unless otherwise specified.

Note 2: Internal thermal shutdown circuitry protects the device from permanent damage. Thermal shutdown engages at T_J = 165°C (typ.) and disengages at T_J = 145°C (typ).

Note 3: Human Body Model, applicable std. JESD22-A114-C.

Note 4: Junction-to-ambient thermal resistance is highly application and board-layout dependent. In applications where high maximum power dissipation exists, special care must be paid to thermal dissipation issues in board design. In applications where high power dissipation and/or poor package thermal resistance is present, the maximum ambient temperature may have to be derated. Maximum ambient temperature ($T_{A\text{-}MAX}$) is dependent on the maximum operating junction temperature ($T_{J\text{-}MAX\text{-}OP}$ = 125°C), the maximum power dissipation of the device in the application ($P_{D\text{-}MAX}$), and the junction-to ambient thermal resistance of the part/package in the application ($R_{\theta JA}$), as given by the following equation: $T_{A\text{-}MAX} = T_{J\text{-}MAX\text{-}OP} - (R_{\theta JA} \times P_{D\text{-}MAX})$.

Typical Performance Characteristics

f_{SW} vs Input Line Voltage

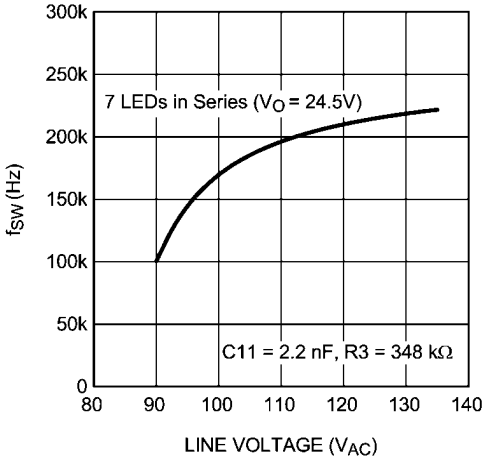

30103204

Efficiency vs Input Line Voltage

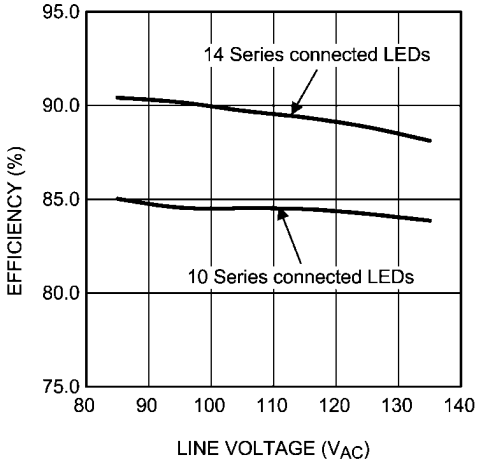

30103205

BLDR Resistor vs Temperature

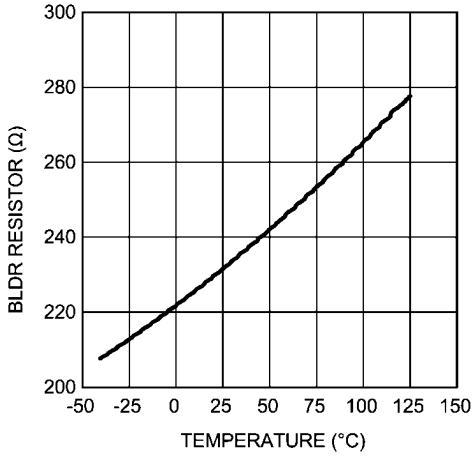

30103206

V_{CC} UVLO vs Temperature

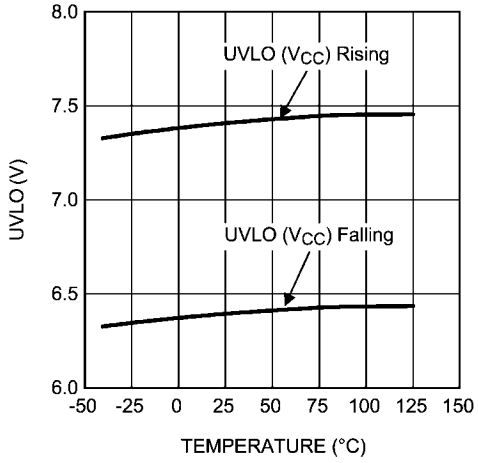

30103207

Min On-Time (t_{ON}) vs Temperature

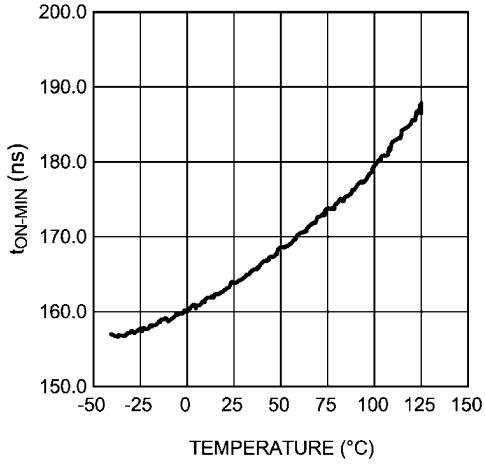

30103208

Off Threshold (C11) vs Temperature

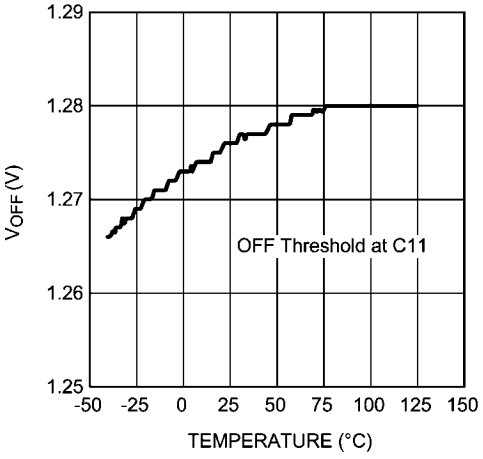

30103209

Normalized Variation in f_{SW} over V_{BUCK} Voltage

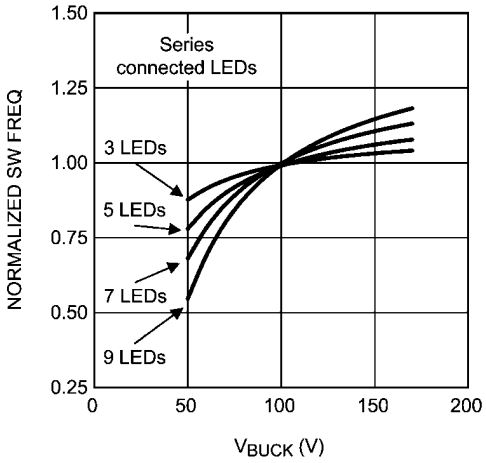

30103210

Leading Edge Blanking Variation Over Temperature

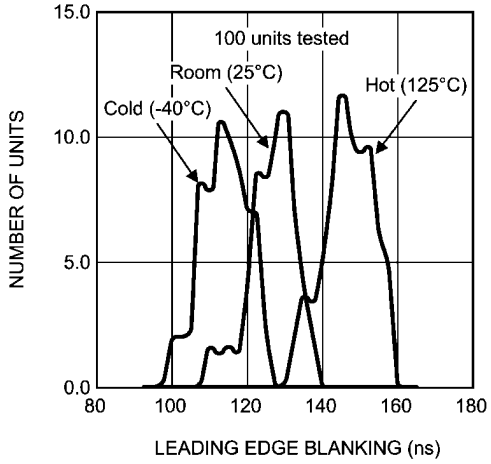

30103272

Simplified Internal Block Diagram

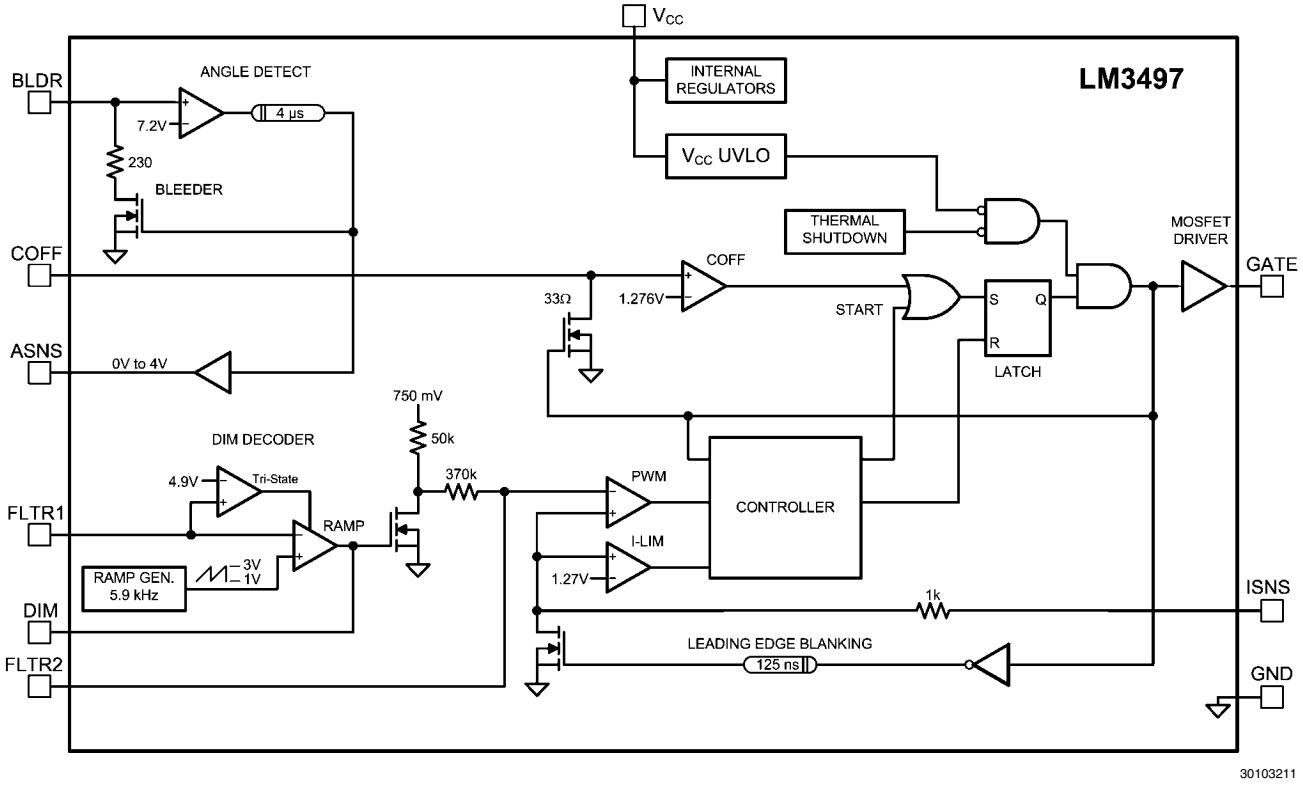

FIGURE 1. Simplified Block Diagram

Application Information

FUNCTIONAL DESCRIPTION

The LM3497 contains all the necessary circuitry to build a line-powered (mains powered) constant current LED driver whose output current can be controlled with a conventional triac dimmer.

OVERVIEW OF PHASE CONTROL DIMMING

A basic "phase controlled" triac dimmer circuit is shown in Figure 2.

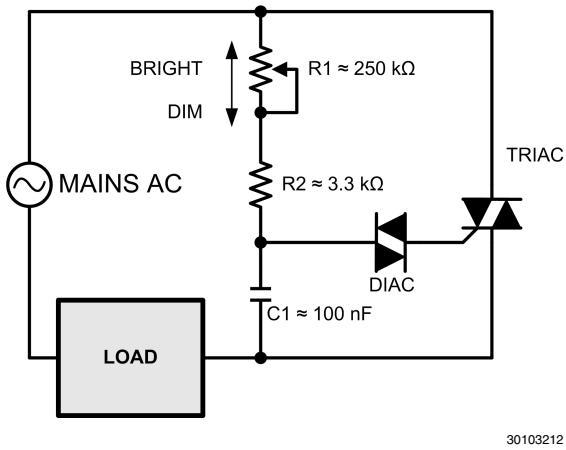

FIGURE 2. Basic Triac Dimmer

An RC network consisting of R1, R2, and C1 delay the turn on of the triac until the voltage on C1 reaches the trigger voltage of the diac. Increasing the resistance of the potentiometer (wiper moving downward) increases the turn-on delay which decreases the on-time or "conduction angle" of the triac (θ). This reduces the average power delivered to the load. Voltage waveforms for a simple triac dimmer are shown in Figure 3. Figure 3a shows the full sinusoid of the input voltage. Even when set to full brightness, few dimmers will provide 100% on-time, i.e., the full sinusoid.

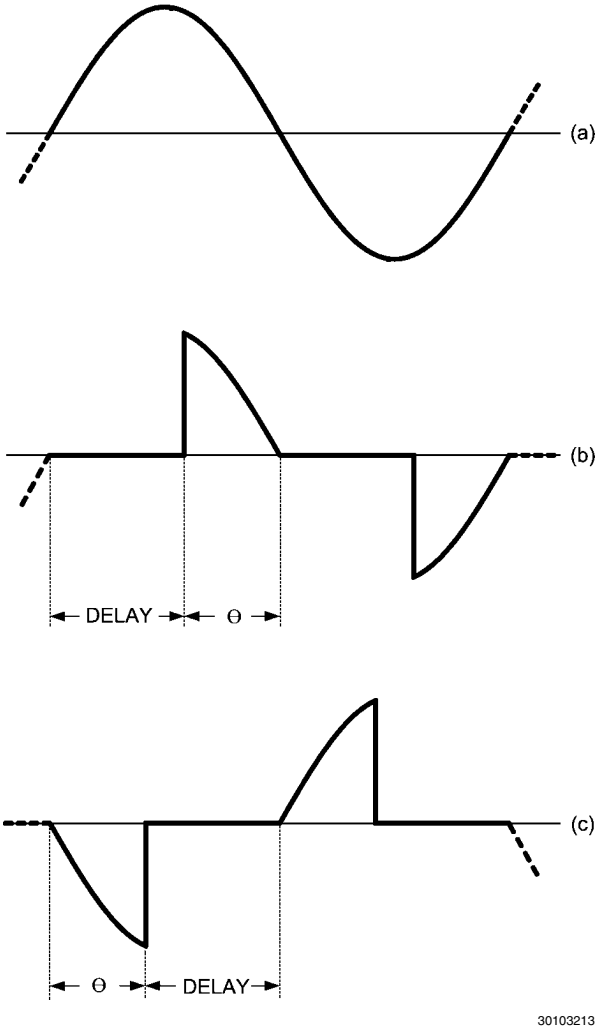

FIGURE 3. Line Voltage and Dimming Waveforms

Figure 3b shows a theoretical waveform from a dimmer. The on-time is often referred to as the "conduction angle" and may be stated in degrees or radians. The off-time represents the delay caused by the RC circuit feeding the triac. The off-time be referred to as the "firing angle" and is simply 180° - θ.

Figure 3c shows a waveform from a so-called reverse phase dimmer, sometimes referred to as an electronic dimmer. These typically are more expensive, microcontroller based dimmers that use switching elements other than triacs. Note that the conduction starts from the zero-crossing, and terminates some time later. This method of control reduces the noise spike at the transition.

Since the LM3497 has been designed to assess the relative on-time and control the LED current accordingly, most phase-control dimmers, both forward and reverse phase, may be used with success.

Theory of Operation

Refer to figure 4 below which shows the LM3497 along with basic external circuitry.

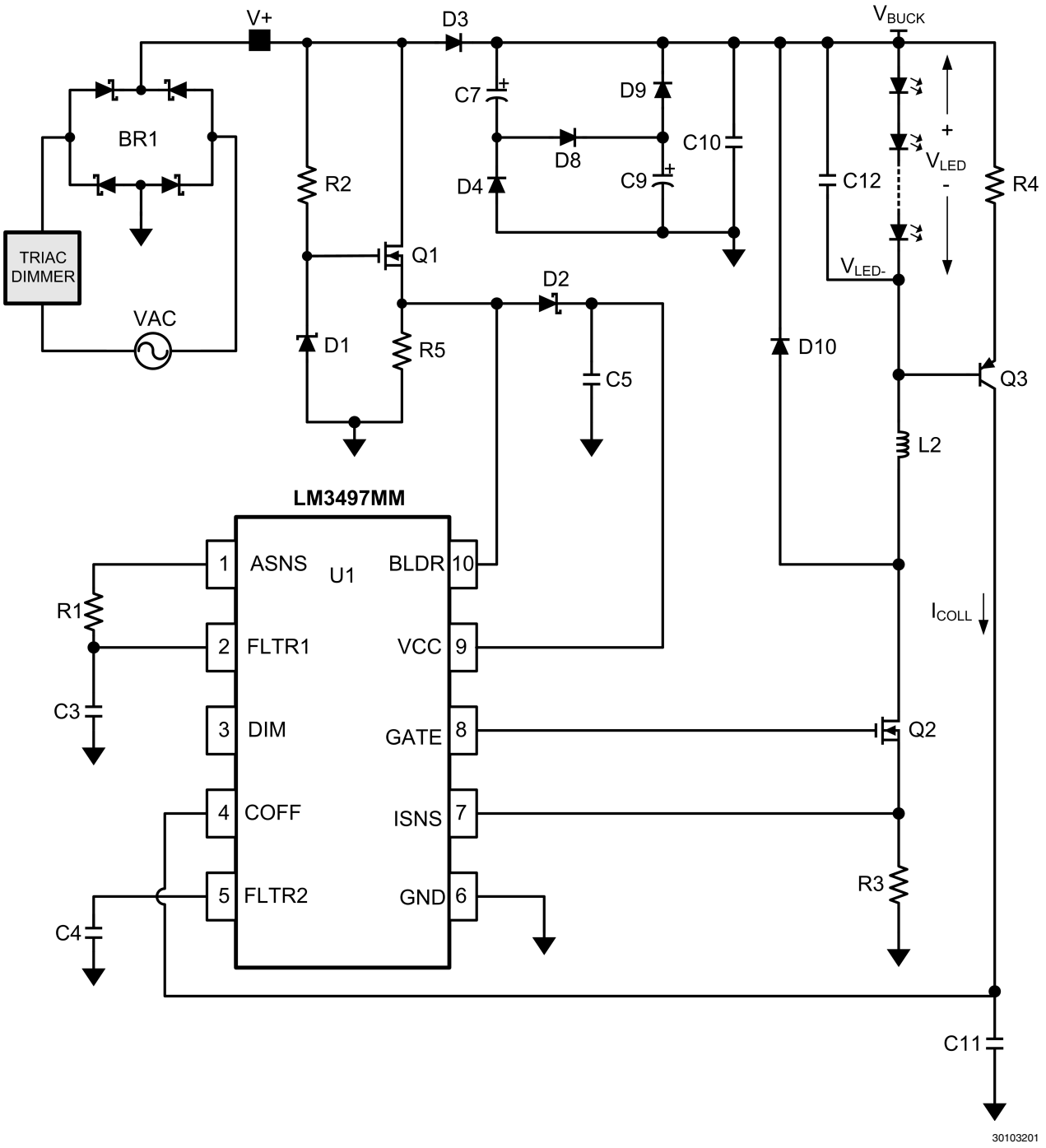

FIGURE 4. LM3497 Schematic

SENSING THE RECTIFIED TRIAC WAVEFORM

A bridge rectifier, BR1, converts the line (mains) voltage (5c) into a series of half-sines as shown in 5b. Figure 5a shows a typical voltage waveform after diode D3 (valley fill circuit, or V_{BUCK}).

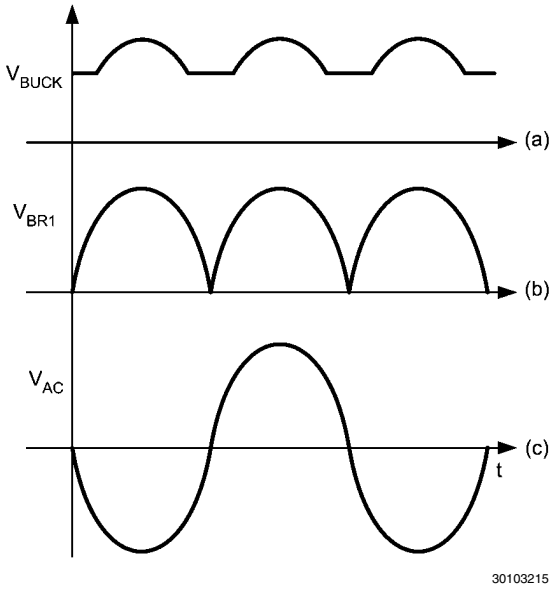

FIGURE 5. Voltage Waveforms After Bridge Rectifier Without Triac Dimming

Figure 6c and 6b show typical triac dimmed voltage waveforms before and after the bridge rectifier. Figure 6a shows a typical triac dimmed voltage waveform after diode D3 (valley fill circuit, or V_{BUCK}).

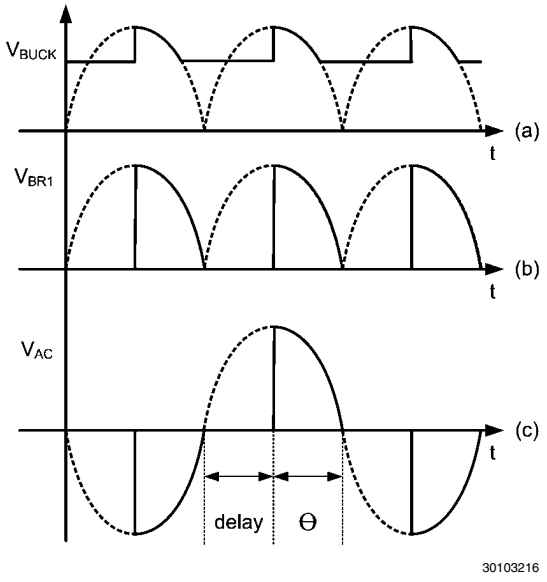

FIGURE 6. Voltage Waveforms After Bridge Rectifier With Triac Dimming

LM3497 LINE SENSING CIRCUITRY

An external series pass regulator (R2, D1, and Q1) translates the rectified line voltage to a level where it can be sensed by the BLDR pin on the LM3497.

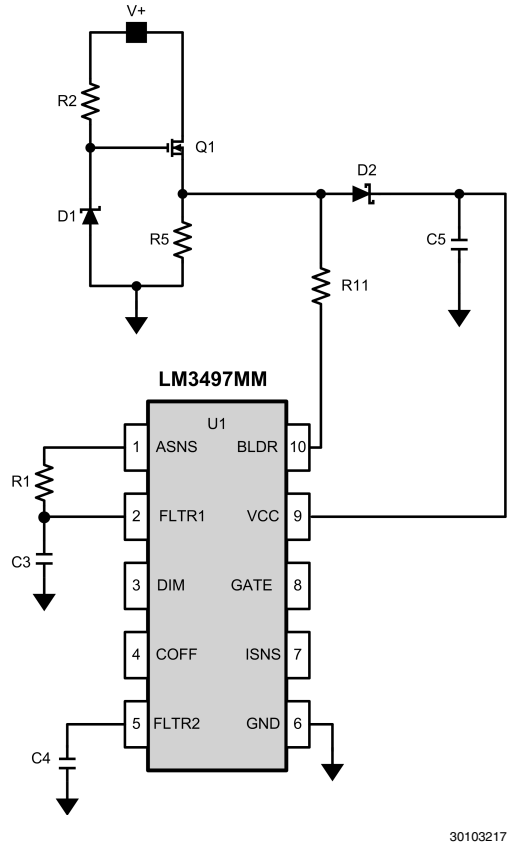

FIGURE 7. LM3497 AC Line Sense Circuitry

D1 is typically a 15V zener diode which forces transistor Q1 to "stand-off" most of the rectified line voltage. Having no capacitance on the source of Q1 allows the voltage on the BLDR pin to rise and fall with the rectified line voltage as the line voltage drops below zener voltage D1 (see the section on Angle Detect).

A diode-capacitor network (D2, C5) is used to maintain the voltage on the VCC pin while the voltage on the BLDR pin goes low. This provides the supply voltage to operate the LM3497.

Resistor R5 is used to bleed charge out of any stray capacitance on the BLDR node and may be used to provide the necessary holding current for the dimmer when operating at light output currents.

TRIAC HOLDING CURRENT RESISTOR

In order to emulate an incandescent light bulb (essentially a resistor) with any LED driver, the existing triac will require a small amount of holding current throughout the AC line cycle. An external resistor (R5) needs to be placed on the source of Q1 to GND to perform this function. Most existing triac dimmers only require a few milliamps of current to hold them on. A few "less expensive" triacs sold on the market will require a bit more current. The value of resistor R5 will depend on:

- What type of triac the LM3497 will be used with
- How many light fixtures are running off of the triac

With a single LM3497 circuit on a common triac dimmer, a holding current resistor between 3 kΩ and 5 kΩ will be required. As the number of LM3497 circuits is added to a single dimmer, the holding resistor R5's resistance can be increased. A few triac dimmers will require a resistor as low as 1 kΩ or lower for a single LM3497 circuit. The trade-off will be

performance vs efficiency. As the holding resistor R5 is increased, the overall efficiency per LM3497 will also increase.

ANGLE DETECT

The Angle Detect circuit uses a comparator with a fixed threshold voltage of 7.21V to monitor the BLDR pin to determine whether the triac is on or off. The output of the comparator drives the ASNS buffer and also controls the Bleeder circuit. A 4 µs delay line on the output is used to filter out noise that could be present on this signal.

The output of the Angle Detect circuit is limited to a 0V to 4.0V swing by the buffer and presented to the ASNS pin. R1 and C3 comprise a low-pass filter with a bandwidth on the order of 1.0Hz.

The Angle Detect circuit and its filter produce a DC level which corresponds to the duty cycle (relative on-time) of the triac dimmer. As a result, the LM3497 will work equally well with 50Hz or 60Hz line voltages.

BLEEDER

While the BLDR pin is below the 7.21V threshold, the bleeder MOSFET is on to place a small load (230Ω) on the series pass regulator. This additional load is necessary to complete the circuit through the triac dimmer so that the dimmer delay circuit can operate correctly. Above 7.21V, the bleeder resistor is removed to increase efficiency.

FLTR1 PIN

The FLTR1 pin has two functions. Normally, it is fed by ASNS through filter components R1 and C3 and drives the dim decoder. However, if the FLTR1 pin is tied above 4.9V (typical), e.g., to VCC, the Ramp Comparator is tri-stated, disabling the dim decoder. See the *Master/Slave* section.

DIM DECODER

The ramp generator produces a 5.85 kHz saw tooth wave with a minimum of 1.0V and a maximum of 3.0V. The filtered ASNS signal enters pin FLTR1 where it is compared against the output of the Ramp Generator.

The output of the ramp comparator will have an on-time which is inversely proportional to the average voltage level at pin FLTR1. However, since the FLTR1 signal can vary between 0V and 4.0V (the limits of the ASNS pin), and the Ramp Generator signal only varies between 1.0V and 3.0V, the output of the ramp comparator will be on continuously for V_{FLTR1} < 1.0V and off continuously for V_{FLTR1} > 3.0V. This allows a decoding range from 45° to 135° to provide a 0 – 100% dimming range.

The output of the ramp comparator drives both a common-source N-channel MOSFET through a Schmitt trigger and the DIM pin (see the Master/Slave section for further functions of the DIM pin). The MOSFET drain is pulled up to 750 mV by a 50 kΩ resistor.

Since the MOSFET inverts the output of the ramp comparator, the drain voltage of the MOSFET is proportional to the duty cycle of the line voltage that comes through the triac dimmer. The amplitude of the ramp generator causes this proportionality to "hard limit" for duty cycles above 75% and below 25%.

The MOSFET drain signal next passes through an RC filter comprised of an internal 370 kΩ resistor, and an external capacitor on pin FLTR2. This forms a second low pass filter to further reduce the ripple in this signal, which is used as a reference by the PWM comparator. This RC filter is generally set to 10Hz.

The net effect is that the output of the dim decoder is a DC voltage whose amplitude varies from near 0V to 750 mV as the duty cycle of the dimmer varies from 25% to 75%. This corresponds to conduction angles of 45° to 135°, respectively.

The output voltage of the Dim Decoder directly controls the peak current that will be delivered by Q2 during its on-time. See the Buck Converter section for details.

As the triac fires beyond 135°, the DIM decoder no longer controls the dimming. At this point the LEDs will dim gradually for one of two reasons:

1. The voltage at V_{BUCK} decreases and the buck converter runs out of headroom and causes LED current to decrease as V_{BUCK} decreases.
2. Minimum on-time is reached which fixes the duty-cycle and therefore reduces the voltage at V_{BUCK}.

The transition from dimming with the DIM decoder to headroom or minimum on-time dimming is seamless. LED currents from full load to as low as 0.5 mA can be easily achieved.

VALLEY-FILL CIRCUIT

V_{BUCK} supplies the power which drives the LED string. Diode D3 allows V_{BUCK} to remain high while V+ cycles on and off. V_{BUCK} has a relatively small hold capacitor C10 which reduces the voltage ripple when the valley fill capacitors are being charged. However, the network of diodes and capacitors shown between D3 and C10 make up a "valley-fill" circuit. The valley-fill circuit can be configured with two or three stages. The most common configuration is two stages. Figure 8 illustrates a two and three stage valley-fill circuit.

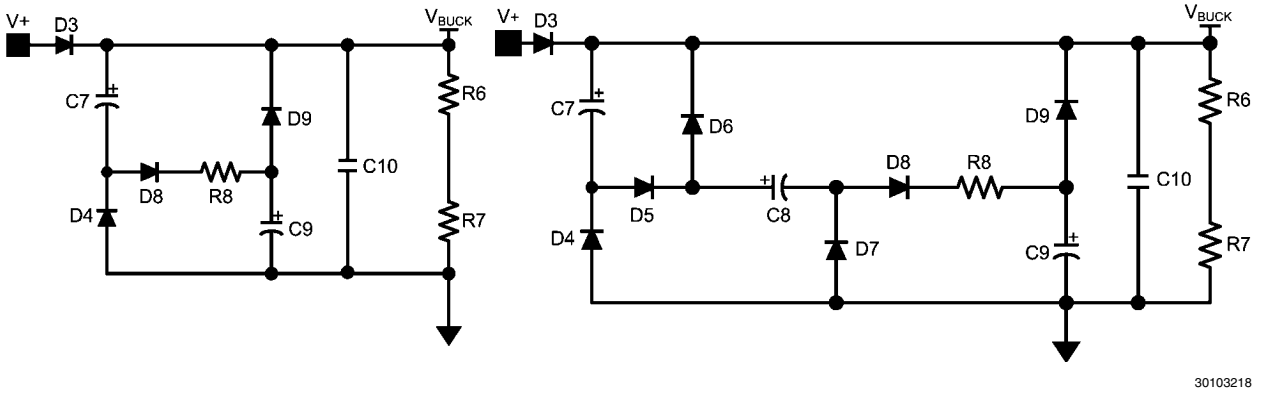

FIGURE 8. Two and Three Stage Valley Fill Circuit

The valley-fill circuit allows the buck regulator to draw power throughout a larger portion of the AC line. This allows the capacitance needed at V_{BUCK} to be lower than if there were no valley-fill circuit, and adds passive power factor correction (PFC) to the application. Besides better power factor correction, a valley-fill circuit allows the buck converter to operate while separate circuitry translates the dimming information. This allows for dimming that isn't subject to 120Hz flicker that can be perceived by the human eye.

VALLEY-FILL OPERATION

When the "input line is high", power is derived directly through D3. The term "input line is high" can be explained as follows. The valley-fill circuit charges capacitors C7 and C9 in series (see figure 9) when the input line is high.

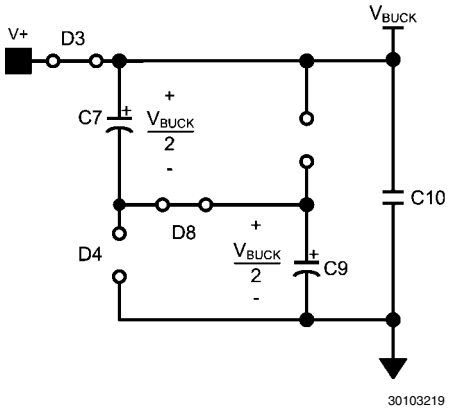

FIGURE 9. Two stage Valley-Fill Circuit when AC Line is High

The peak voltage of a two stage valley-fill capacitor is:

$$V_{VF\text{-}CAP} = \frac{V_{AC\text{-}RMS}\sqrt{2}}{2}$$

As the AC line decreases from its peak value every cycle, there will be a point where the voltage magnitude of the AC line is equal to the voltage that each capacitor is charged. At this point diode D3 becomes reversed biased, and the capacitors are placed in parallel to each other (figure 10), and V_{BUCK} equals the capacitor voltage.

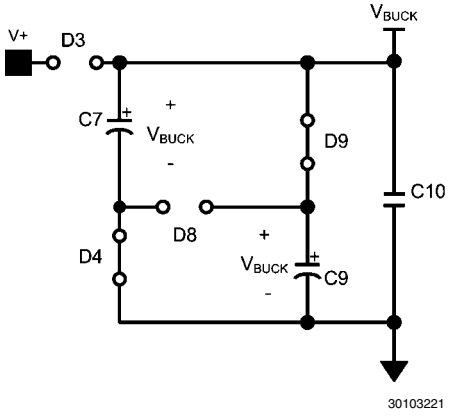

FIGURE 10. Two stage Valley-Fill Circuit when AC Line is Low

A three stage valley-fill circuit performs exactly the same as two-stage valley-fill circuit except now three capacitors are now charged in series, and when the line voltage decreases to:

$$V_{VF\text{-}CAP} = \frac{V_{AC\text{-}RMS}\sqrt{2}}{3}$$

Diode D3 is reversed biased and three capacitors are in parallel to each other.

The valley-fill circuit can be optimized for power factor, voltage hold up and overall application size and cost. The LM3497 will operate with a single stage or a three stage valley-fill circuit as well. Resistor R8 functions as a current limiting resistor during start-up, and during the transition from series to parallel connection. Resistors R6 and R7 are 1 MΩ bleeder resistors, and may or may not be necessary for each application.

BUCK CONVERTER

The LM3497 is a buck controller that uses a proprietary constant off-time method to maintain constant current through a string of LEDs. While transistor Q2 is on, current ramps up through the inductor and LED string. A resistor R3 senses this current and this voltage is compared to the reference voltage at FLTR2. When this sensed voltage is equal to the reference voltage, transistor Q2 is turned off and diode D10 conducts the current through the inductor and LEDs. Capacitor C12 eliminates most of the ripple current seen in the inductor. Resistor R4, capacitor C11, and transistor Q3 provide a linear current ramp that sets the constant off-time for a given output voltage.

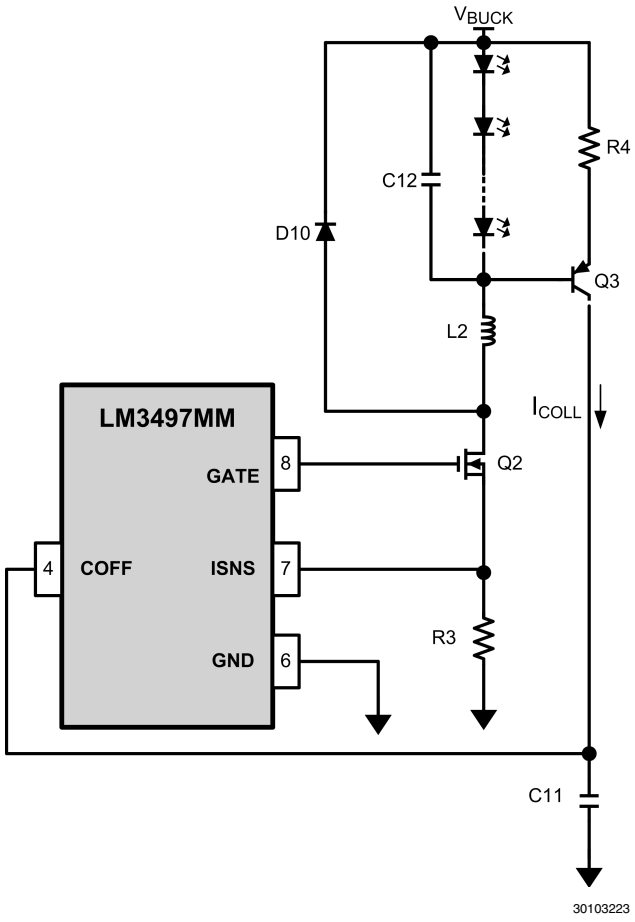

FIGURE 11. LM3497 Buck Regulation Circuit

OVERVIEW OF CONSTANT OFF-TIME CONTROL

A buck converter's conversion ratio is defined as:

$$\frac{V_O}{V_{IN}} = D = \frac{t_{ON}}{t_{ON} + t_{OFF}} = t_{ON} \times f_{SW}$$

Constant off-time control architecture operates by simply defining the off-time and allowing the on-time, and therefore the switching frequency, to vary as either V_{IN} or V_O changes. The output voltage is equal to the LED string voltage (V_{LED}), and should not change significantly for a given application. The input voltage or V_{BUCK} in this analysis will vary as the input line varies. The length of the on-time is determined by the sensed inductor current through a resistor to a voltage reference at a comparator. During the on-time, denoted by t_{ON}, MOSFET switch Q2 is on causing the inductor current to increase. During the on-time, current flows from V_{BUCK}, through the LEDs, through L2, Q2, and finally through R3 to ground. At some point in time, the inductor current reaches a maximum ($I_{L2\text{-}PK}$) determined by the voltage sensed at R3 and the ISNS pin. This sensed voltage across R3 is compared against the voltage of dim decoder output, FLTR2, at which point Q2 is turned off by the controller.

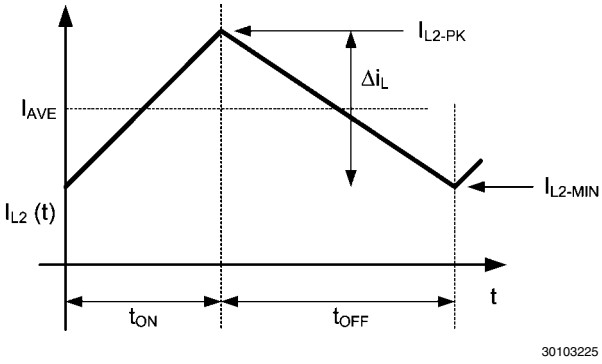

FIGURE 12. Inductor Current Waveform in CCM

During the off-period denoted by t_{OFF}, the current through L2 continues to flow through the LEDs via D10.

MASTER/SLAVE OPERATION

Multiple LM3497s can be configured so that large strings of LEDs can be controlled by a single triac dimmer. By doing so, smooth consistent dimming for multiple LED circuits is achieved.

When the FLTR1 pin is tied above 4.9V (typical), preferably to VCC, the ramp comparator is tri-stated, disabling the dim decoder. This allows one or more LM3497 devices or PWM LED driver devices (slaves) to be controlled by a single LM3497 (master) by connecting their DIM pins together.

MASTER/SLAVE CONFIGURATION

National Semiconductor offers an LM3497 demonstration PCB for customer evaluation through our website. The following description and theory uses reference designators that follow our evaluation PCB. The LM3497 Master/Slave schematics are illustrated below (figures 13 - 15) for clarity. Each board contains a separate circuit for the Master and Slave function. Both the Master and Slave boards will need to be modified from their original stand alone function so that they can be coupled together. Only the Master LM3497 requires use of the Master/Slave circuit for any number of slaves.

MASTER BOARD MODIFICATIONS

- Remove R10 and replace with a BAS40 diode
- Connect TP18 to TP14 (V_{CC})
- Connect TP17 (gate of Q5) to TP15 (gate of Q2)

SLAVE BOARD(S) MODIFICATIONS

- Remove R11 (disconnects BLDR)
- Tie TP14 (FLTR1) to V_{CC}

MASTER/SLAVE(S) INTERCONNECTION

- Connect TP19 of Master to TP10 of Slave (Master VCC Control)
- Connect TP6 (DIM pin) of Master to TP6 (DIM pin) of Slave (Master DIM Control)

MASTER/SLAVE THEORY OF OPERATION

By placing two series diodes on the Master VCC circuit one forces the master VCC UVLO to become the dominant threshold. When Master VCC drops below UVLO, GATE stops switching and the RC timer (>200 µs) rises above the TL431 threshold (2.5V) which in turn pulls down on the gate of the Slave pass device (Q1).

The valley-fill circuit could consist of one large circuit to power all LM3497 series connected, or each LM3497 circuit could have a separate valley-fill circuit located near the buck converter.

MASTER/SLAVE CONNECTION DIAGRAM

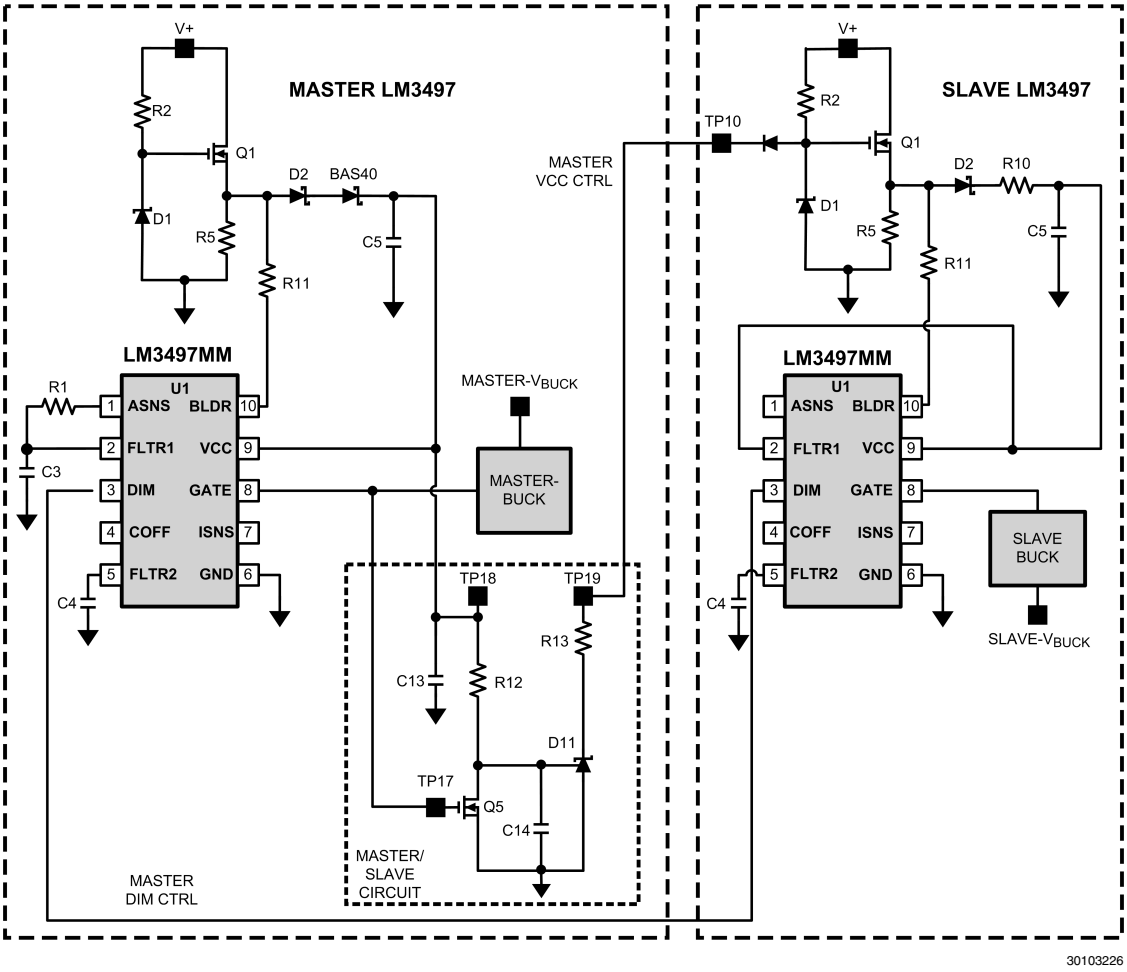

FIGURE 13. Master Slave Configuration

MASTER/SLAVE BLOCK DIAGRAMS

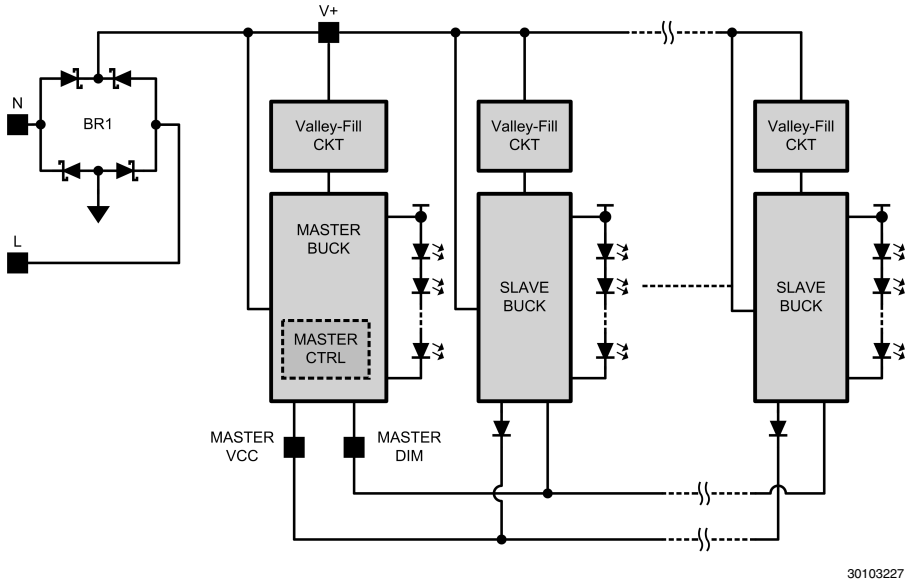

FIGURE 14. Master/Slave configuration with Separate Valley-Fill Circuits

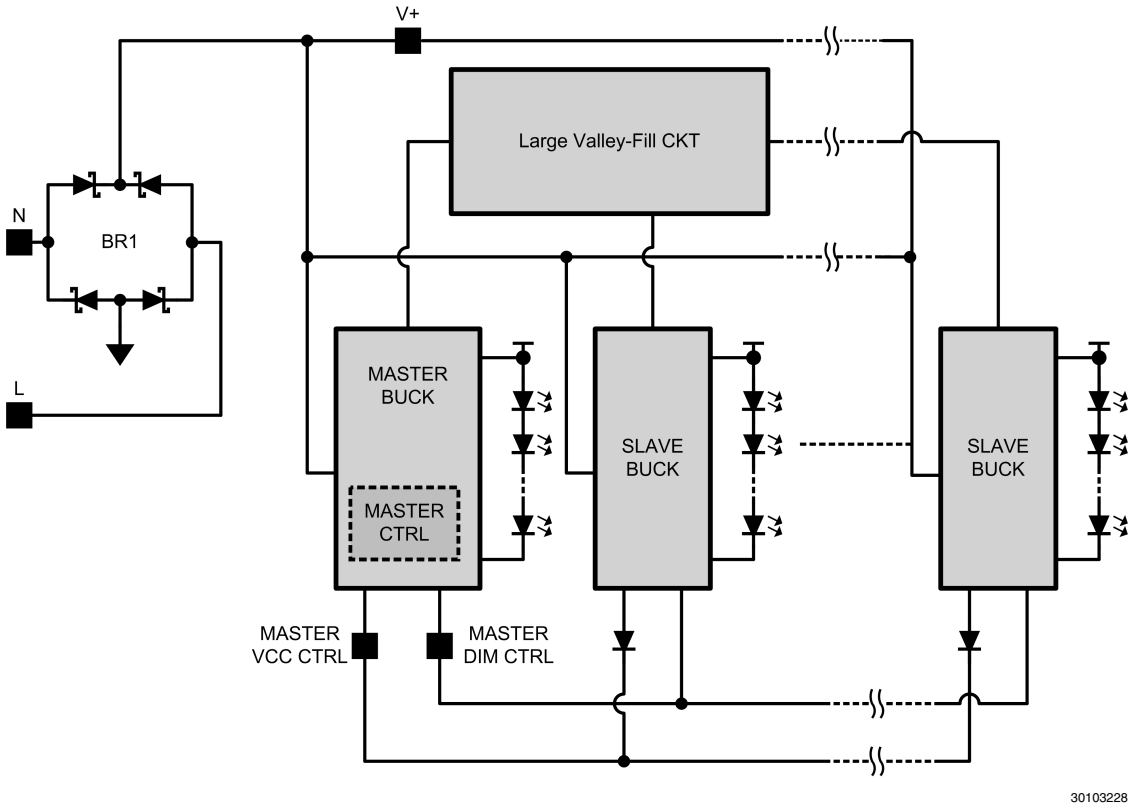

FIGURE 15. Master/Slave configuration with One Valley-Fill Circuit

THERMAL SHUTDOWN

Thermal shutdown limits total power dissipation by turning off the output switch when the IC junction temperature exceeds 165°C. After thermal shutdown occurs, the output switch doesn't turn on until the junction temperature drops to approximately 145°C.

Design Guide

DETERMINING DUTY-CYCLE (D)

Duty cycle (D) approximately equals:

$$\frac{V_{LED}}{V_{BUCK}} = D = \frac{t_{ON}}{t_{ON} + t_{OFF}} = t_{ON} \times f_{SW}$$

With efficiency considered:

$$\frac{1}{\eta} \times \frac{V_{LED}}{V_{BUCK}} = D$$

For simplicity, choose efficiency between 75% and 85%.

CALCULATING OFF-TIME

The "Off-Time" of the LM3497 is set by the user and remains fairly constant as long as the voltage of the LED stack remains constant. Calculating the off-time is the first step in determining the switching frequency of the converter, which is integral in determining some external component values.

PNP transistor Q3, resistor R4, and the LED string voltage define a charging current into capacitor C11. A constant current into a capacitor creates a linear charging characteristic.

$$i = C\frac{dv}{dt}$$

Resistor R4, capacitor C11 and the current through resistor R4 (i_{COLL}), which is approximately equal to V_{LED}/R4, are all fixed. Therefore, dv is fixed and linear, and dt (t_{OFF}) can now be calculated.

$$t_{OFF} = C11 \times 1.276V \times \left(\frac{R4}{V_{LED}}\right)$$

Common equations for determining duty cycle and switching frequency in any buck converter:

$$f_{SW} = \frac{1}{t_{OFF} + t_{ON}}$$

$$D = \frac{t_{ON}}{t_{ON} + t_{OFF}} = \frac{V_{LED}}{V_{BUCK}}$$

$$D' = \frac{t_{OFF}}{t_{ON} + t_{OFF}}$$

Therefore:

$$f_{SW} = \frac{D}{t_{ON}}, \text{ and } f_{SW} = \frac{1 - D}{t_{OFF}}$$

With efficiency of the buck converter in mind:

$$\frac{V_{LED}}{V_{BUCK}} = \eta \times D$$

Substitute equations and rearrange:

$$f_{SW} = \frac{\left(1 - \frac{1}{\eta} \times \frac{V_{LED}}{V_{BUCK}}\right)}{t_{OFF}}$$

Off-time, and switching frequency can now be calculated using the equations above.

SETTING THE SWITCHING FREQUENCY

Selecting the switching frequency for nominal operating conditions is based on tradeoffs between efficiency (better at low frequency) and solution size/cost (smaller at high frequency).

The input voltage to the buck converter (V_{BUCK}) changes with both line variations and over the course of each half-cycle of the input line voltage. The voltage across the LED string will, however, remain constant, and therefore the off-time remains constant.

The on-time, and therefore the switching frequency, will vary as the V_{BUCK} voltage changes with line voltage. A good design practice is to choose a desired nominal switching frequency knowing that the switching frequency will decrease as the line voltage drops and increase as the line voltage increases (see figure 16).

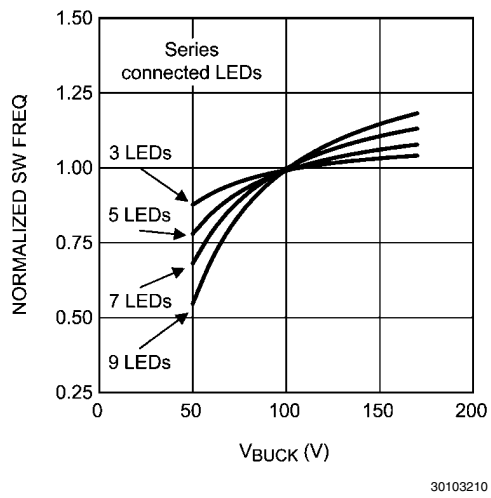

FIGURE 16. Graphical Illustration of Switching Frequency vs V_{BUCK}

The off-time of the LM3497 can be programmed for switching frequencies ranging from 30 kHz to over 1 MHz. A trade-off between efficiency and solution size must be considered when designing the LM3497 application.

The maximum switching frequency attainable is limited only by the minimum on-time requirement (200 ns).

Worst case scenario for minimum on time is when V_{BUCK} is at its maximum voltage (AC high line) and the LED string voltage (V_{LED}) is at its minimum value.

$$t_{ON(MIN)} = \left(\frac{1}{\eta} \times \frac{V_{LED(MIN)}}{V_{BUCK(MAX)}}\right)\frac{1}{f_{SW}}$$

The maximum voltage seen by the Buck Converter is:

$$V_{BUCK(MAX)} = V_{AC\text{-}RMS(MAX)} \times \sqrt{2}$$

INDUCTOR SELECTION

The controlled off-time architecture of the LM3497 regulates the average current through the inductor (L2), and therefore the LED string current. The input voltage to the buck converter (V_{BUCK}) changes with line variations and over the course of each half-cycle of the input line voltage. The voltage across the LED string is relatively constant, and therefore the current through R4 is constant. This current sets the off-time of the converter and therefore the output volt-second product (V_{LED} x off-time) remains constant. A constant volt-second product makes it possible to keep the ripple through the inductor constant as the voltage at V_{BUCK} varies.

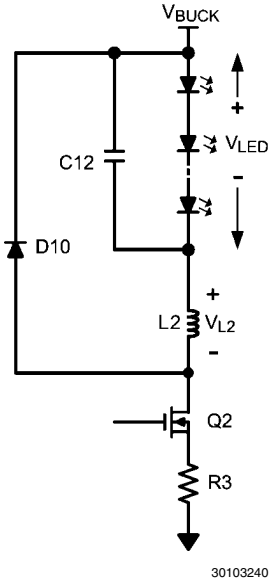

FIGURE 17. LM3497 External Components of the Buck Converter

The equation for an ideal inductor is:

$$v = L\frac{di}{dt}$$

Given a fixed inductor value, L, this equation states that the change in the inductor current over time is proportional to the voltage applied across the inductor.

During the on-time, the voltage applied across the inductor is,

$$V_{L(ON\text{-}TIME)} = V_{BUCK} - (V_{LED} + V_{DS(Q2)} + I_{L2} \times R3)$$

Since the voltage across the MOSFET switch (Q2) is relatively small, as is the voltage across sense resistor R3, we can simplify this to approximately,

$$V_{L(ON\text{-}TIME)} = V_{BUCK} - V_{LED}$$

During the off-time, the voltage seen by the inductor is approximately:

$$V_{L(OFF\text{-}TIME)} = V_{LED}$$

The value of $V_{L(OFF\text{-}TIME)}$ will be relatively constant, because the LED stack voltage will remain constant. If we rewrite the equation for an inductor inserting what we know about the circuit during the off-time, we get:

$$V_{L(OFF\text{-}TIME)} = V_{LED} = L \times \frac{\Delta i}{\Delta t}$$

$$V_{L(OFF\text{-}TIME)} = V_{LED} = L \times \frac{(I_{(MAX)} - I_{(MIN)})}{\Delta t}$$

Re-arranging this gives:

$$\Delta i \cong t_{OFF} \times \frac{V_{LED}}{L2}$$

From this we can see that the ripple current (Δi) is proportional to off-time (t_{OFF}) multiplied by a voltage which is dominated by V_{LED} divided by a constant (L2).

These equations can be rearranged to calculate the desired value for inductor L2.

$$L2 \cong t_{OFF} \times \frac{V_{LED}}{\Delta i}$$

Where:

$$t_{OFF} = \frac{\left(1 - \frac{1}{\eta} \times \frac{V_{LED}}{V_{BUCK}}\right)}{f_{SW}}$$

Finally:

$$L2 = \frac{V_{LED}\left(1 - \frac{1}{\eta} \times \frac{V_{LED}}{V_{BUCK}}\right)}{f_{SW} \times \Delta i}$$

Refer to “Design Example” section of the datasheet to better understand the design process.

SETTING THE LED CURRENT

The LM3497 constant off-time control loop regulates the peak inductor current (I_{L2}). The average inductor current equals the average LED current (I_{AVE}). Therefore the average LED current is regulated by regulating the peak inductor current.

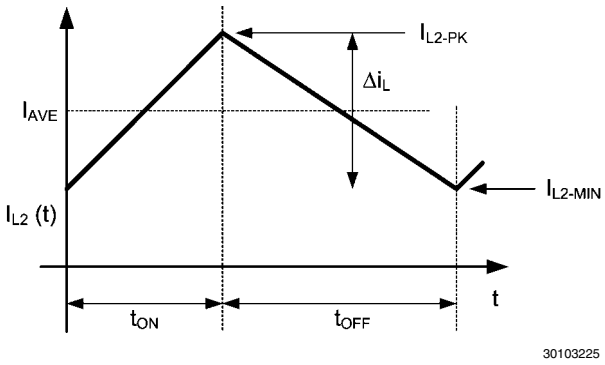

FIGURE 18. Inductor Current Waveform in CCM

Knowing the desired average LED current, I_{AVE} and the nominal inductor current ripple, Δi_L, the peak current for an application running in continuous conduction mode (CCM) is defined as follows:

$$I_{L2\text{-}PK} = I_{AVE} + \frac{\Delta i_L}{2}$$

Or, the maximum, or "undimmed", LED current would then be,

$$I_{AVE(UNDIM)} = I_{L2\text{-}PK(UNDIM)} - \frac{\Delta i_L}{2}$$

This is important to calculate because this peak current multiplied by the sense resistor R3 will determine when the internal comparator is tripped. The internal comparator turns the control MOSFET off once the peak sensed voltage reaches 750 mV.

$$I_{L\text{-}PK(UNDIM)} = \frac{750\ \text{mV}}{R3}$$

Current Limit: Under normal circumstances, the trip voltage on the PWM comparator would be less than or equal to 750 mV, depending on the amount of dimming. However, if there is a short circuit or an excessive load on the output, higher than normal switch currents will cause a voltage above 1.27V on the ISNS pin which will trip the I-LIM comparator. The I-LIM comparator will reset the RS latch, turning off Q2. It will also inhibit the Start Pulse Generator and the COFF comparator by holding the COFF pin low. A delay circuit will prevent the start of another cycle for 180 µs.

VALLEY FILL CAPACITORS

Determining voltage rating and capacitance value of the valley-fill capacitors:

The maximum voltage seen by the valley-fill capacitors is:

$$V_{VF\text{-}CAP} = \frac{V_{AC(MAX)}\sqrt{2}}{\#\text{stages}}$$

This is, of course, if the capacitors chosen have identical capacitance values and split the line voltage equally. Often a 20% difference in capacitance could be observed between like capacitors. Therefore a voltage rating margin of 25% to 50% should be considered.

Determining the capacitance value of the valley-fill capacitors:

The valley fill capacitors should be sized to supply energy to the buck converter (V_{BUCK}) when the input line is less than its peak divided by the number of stages used in the valley fill (t_X). The capacitance value should be calculated when the triac is not firing, i.e. when full LED current is being drawn by the LED string. The maximum power is delivered to the LED string at this time, and therefore the most capacitance will be needed.

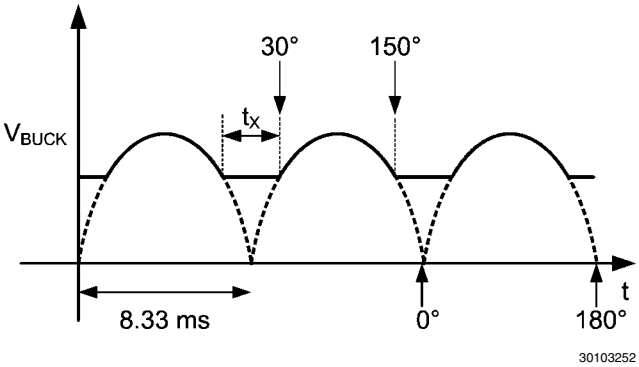

FIGURE 19. Two Stage Valley-Ffill V_{BUCK} Voltage with no TRIAC Dimming

From the above illustration and the equation for current in a capacitor, i = C x dV/dt, the amount of capacitance needed at V_{BUCK} will be calculated as follows:

At 60Hz, and a valley-fill circuit of two stages, the hold up time (t_X) required at V_{BUCK} is calculated as follows. The total angle of an AC half cycle is 180° and the total time of a half AC line cycle is 8.33 ms. When the angle of the AC waveform is at 30° and 150°, the voltage of the AC line is exactly ½ of its peak. With a two stage valley-fill circuit, this is the point where the LED string switches from power being derived from AC line to power being derived from the hold up capacitors (C7 and C9). 60° out of 180° of the cycle or 1/3 of the cycle the power is derived from the hold up capacitors (1/3 x 8.33 ms = 2.78 ms). This is equal to the hold up time (dt) from the above equation, and dv is the amount of voltage the circuit is allowed to droop. From the next section ("Determining Maximum Number of Series Connected LEDs Allowed") we know the minimum V_{BUCK} voltage will be about 45V for a $90V_{AC}$ to $135V_{AC}$ line. At $90V_{AC}$ low line operating condition input, ½ of the peak voltage is 64V. Therefore with some margin the voltage at V_{BUCK} can not droop more than about 15V (dv). (i) is equal to (P_{OUT}/V_{BUCK}), where P_{OUT} is equal to (V_{LED} x I_{LED}). Total capacitance (C7 in parallel with C9) can now be calculated. See " Design Example" section for further calculations of the valley-fill capacitors.

Determining Maximum Number of Series Connected LEDs Allowed:

The LM3497 is an off-line buck topology LED driver. A buck converter topology requires that the input voltage (V_{BUCK}) of the output circuit must be greater than the voltage of the LED stack (V_{LED}) for proper regulation. One must determine what the minimum voltage observed by the buck converter will be before the maximum number of LEDs allowed can be determined. Two variables will have to be determined in order to accomplish this.

1. AC line operating voltage. This is usually $90V_{AC}$ to $135V_{AC}$ for North America. Although the LM3497 can operate at much lower and higher input voltages a range is needed to illustrate the design process.
2. How many stages are implemented in the valley-fill circuit (1, 2 or 3).

In this example the most common valley-fill circuit will be used (two stages).

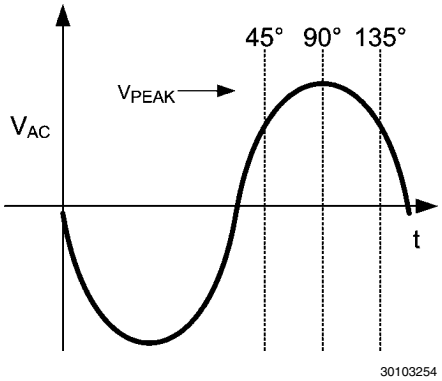

FIGURE 20. AC Line with Firing Angles

Figure 21 show three triac dimmed waveforms. One can easily see that the peak voltage (V_{PEAK}) from 0° to 90° will always be:

$$V_{AC\text{-}RMS\text{-}PK}\sqrt{2}$$

Once the triac is firing at an angle greater than 90° the peak voltage will lower and equal to:

$$V_{AC\text{-}RMS\text{-}PK}\sqrt{2} \text{ x } SIN(\theta)$$

The voltage at V_{BUCK} with a valley fill stage of two will look similar to the waveforms of figure 22.

The purpose of the valley fill circuit is to allow the buck converter to pull power directly off of the AC line when the line voltage is greater than its peak voltage divided by two (two stage valley fill circuit). During this time, the capacitors within the valley fill circuit (C7 and C8) are charged up to the peak of the AC line voltage. Once the line drops below its peak divided by two, the two capacitors are placed in parallel and deliver power to the buck converter. One can now see that if the peak of the AC line voltage is lowered due to variations in the line voltage, or if the triac is firing at an angle above 90°, the DC offset (V_{DC}) will lower. V_{DC} is the lowest value that voltage V_{BUCK} will encounter.

$$V_{BUCK(MIN)} = \frac{V_{AC\text{-}RMS(MIN)}\sqrt{2} \text{ x } SIN(\theta)}{\#stages}$$

Example:

Line voltage = $90V_{AC}$ to $135V_{AC}$

Valley-Fill = two stage

$$V_{BUCK(MIN)} = \frac{90\sqrt{2} \text{ x } SIN(135^{o})}{2} = 45V$$

Depending on what type and value of capacitors are used, some derating should be used for voltage droop when the

capacitors are delivering power to the buck converter. When the triac is firing at 135° the current through the LED string will be small. Therefore the droop should be small at this point and a 5% voltage droop should be a sufficient derating. With this derating, the lowest voltage the buck converter will see is about 42.5V in this example.

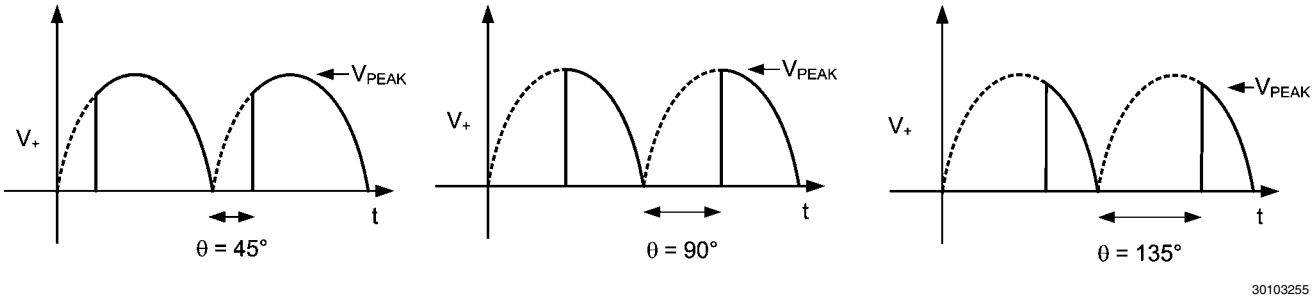

FIGURE 21. AC Line with Various Firing Angles

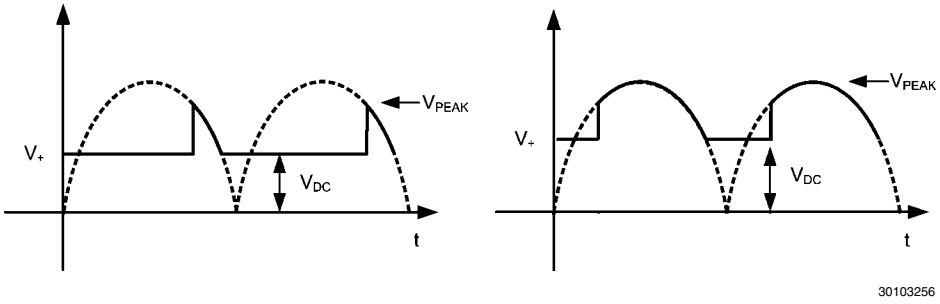

FIGURE 22. V_{BUCK} Waveforms with Various Firing Angles

To determine how many LEDs can be driven, take the minimum voltage the buck converter will see (42.5V) and divide it by the worst case forward voltage drop of a single LED.

Example: 42.5V/3.7V = 11.5 LEDs (11 LEDs with margin)

OUTPUT CAPACITOR

A capacitor placed in parallel with the LED or array of LEDs can be used to reduce the LED current ripple while keeping the same average current through both the inductor and the LED array. With a buck topology the output inductance (L2) can now be lowered, making the magnetics smaller and less expensive. With a well designed converter, you can assume that all of the ripple will be seen by the capacitor, and not the LEDs. One must ensure that the capacitor you choose can handle the RMS current of the inductor. Refer to manufacture's datasheets to ensure compliance. Usually an X5R or X7R capacitor between 1 µF and 10 µF of the proper voltage rating will be sufficient.

SWITCHING MOSFET

The main switching MOSFET should be chosen with efficiency and robustness in mind. The maximum voltage across the switching MOSFET will equal:

$$V_{DS(MAX)} = V_{AC\text{-}RMS(MAX)}\sqrt{2}$$

The average current rating should be greater than:

$$I_{DS\text{-}MAX} = I_{LED(\text{-}AVE)}(D_{MAX})$$

RE-CIRCULATING DIODE

The LM3497 Buck converter requires a re-circulating diode D10 (see the Typical Application circuit figure 4) to carry the inductor current during the MOSFET Q2 off-time. The most efficient choice for D10 is a diode with a low forward drop and near-zero reverse recovery time that can withstand a reverse voltage of the maximum voltage seen at V_{BUCK}. For a common $110V_{AC}$ ± 20% line, the reverse voltage could be as high as 190V.

$$V_D \geq V_{AC\text{-}RMS(MAX)}\sqrt{2}$$

The current rating must be at least:

$$I_D = 1 - (D_{MIN}) \times I_{LED(AVE)}$$

Or:

$$I_D = \left(1 - \frac{V_{LED(MIN)}}{V_{BUCK(MAX)}}\right) \times I_{LED(AVE)}$$

Design Example

The following design example illustrates the process of calculating external component values.

Known:

1. Input voltage range ($90V_{AC}$ – $135V_{AC}$)
2. Number of LEDs in series = 7
3. Forward voltage drop of a single LED = 3.6V
4. LED stack voltage = (7 x 3.6V) = 25.2V

Choose:

1. Nominal switching frequency, $f_{SW\text{-}TARGET}$ = 250 kHz
2. $I_{LED(AVE)}$ = 400 mA
3. Δi (usually 15% - 30% of $_{ILED(AVE)}$) = (0.30 x 400 mA) = 120 mA
4. Valley fill stages (1,2, or 3) = 2
5. Assumed minimum efficiency = 80%

Calculate:

1. Calculate minimum voltage V_{BUCK} equals:

$$V_{BUCK(MIN)} = \frac{90\sqrt{2}\ \text{x SIN}(135^{o})}{2} = 45V$$

2. Calculate maximum voltage V_{BUCK} equals:

$$V_{BUCK(MAX)} = 135\sqrt{2} = 190V$$

3. Calculate t_{OFF} at V_{BUCK} nominal line voltage:

$$t_{OFF} = \frac{\left(1 - \frac{1}{0.8} \times \frac{25.2V}{115\sqrt{2}}\right)}{(250\ \text{kHz})} = 3.23\ \mu s$$

4. Calculate $t_{ON(MIN)}$ at high line to ensure that $t_{ON(MIN)}$ > 200 ns:

$$t_{ON\ (MIN)} = \frac{\left(\frac{1}{0.8} \times \frac{25.2V}{135\sqrt{2}}\right)}{\left(1 - \frac{1}{0.8} \times \frac{25.2V}{135\sqrt{2}}\right)} \times 3.23\ \mu s = 638\ \text{ns}$$

5. Calculate C11 and R4:
6. Choose current through R4: (between 50 µA and 100 µA) 70 µA

$$R4 = \frac{V_{LED}}{I_{COLL}} = 360\ k\Omega$$

7. Use a standard value of 365 kΩ
8. Calculate C11:
9.

$$C11 = \left(\frac{V_{LED}}{R4}\right)\left(\frac{t_{OFF}}{1.276}\right) = 175\ pF$$

10. Use standard value of 120 pF
11. Calculate ripple current: 400 mA X 0.30 = 120 mA
12. Calculate inductor value at t_{OFF} = 3 µs:

$$L2 = \frac{25.2V\left(1 - \frac{1}{0.8} \times \frac{25.2V}{115\sqrt{2}}\right)}{(350\ \text{kHz x } 0.1A)} = 580\ \mu H$$

13. Choose C10: 1.0 µF 200V
14. Calculate valley-fill capacitor values: V_{AC} low line = $90V_{AC}$, V_{BUCK} minimum equals 60V (no triac dimming at maximum LED current). Set droop for 20V maximum at full load and low line.

$$i = C\frac{dv}{dt}$$

i) equals P_{OUT}/V_{BUCK} (270 mA), dV equals 20V, dt equals 2.77 ms, and then C_{TOTAL} equals 37 µF. Therefore C7 = C9 = 22 µF

LM3497 Design Example 1
Input = 90V_{AC} to 135V_{AC}, V_{LED} = 7 x HB LED String Application @ 400 mA

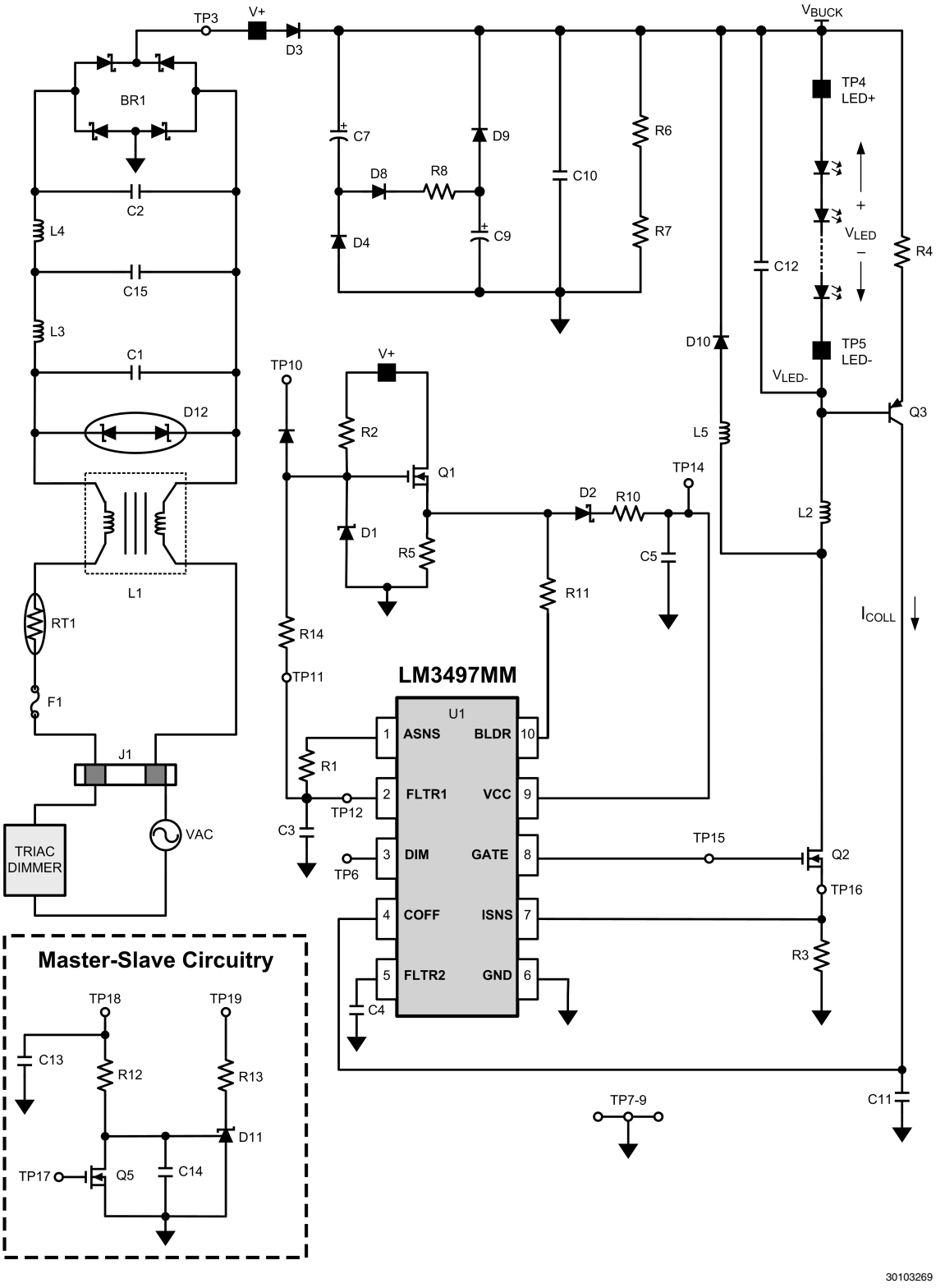

Bill of Materials

Qty	Ref Des	Description	Mfr	Mfr PN
1	U1	IC, CTRLR, DRVR-LED, MSOP10	NSC	LM3497MM
1	BR1	Bridge Rectifiier, SMT, 400V, 800 mA	DiodesInc	HD04-T
1	L1	Common mode filter DIP4NS, 900 mA, 700 µH	Panasonic	ELF-11090E
1	L2	Inductor, SHLD, SMT, 1A, 470 µH	Coilcraft	MSS1260-474-KLB
2	L3, L4	Diff mode inductor, 500 mA 1 mH	Coilcraft	MSS1260-105KL-KLB
1	L5	Bead Inductor, 160Ω, 6A	Steward	HI1206T161R-10
3	C1, C2, C15	Cap, Film, X2Y2, 12.5MM, 250V_{AC}, 20%, 10 nF	Panasonic	ECQ-U2A103ML
1	C3	Cap, X7R, 0603, 16V, 10%, 470 nF	MuRata	GRM188R71C474KA88D
1	C4	Cap, X7R, 0603, 16V, 10%, 100 nF	MuRata	GRM188R71C104KA01D
2	C5, C6	Cap, X5R, 1210, 25V, 10%, 22 µF	MuRata	GRM32ER61E226KE15L
2	C7, C9	Cap, AL, 200V, 105C, 20%, 33 µF	UCC	EKXG201ELL330MK20S
1	C10	Cap, Film, 250V, 5%, 10 nF	Epcos	B32521C3103J
1	C12	Cap, X7R, 1206, 50V, 10%, 1.0 uF	Kemet	C1206F105K5RACTU
1	C11	Cap, C0G, 0603, 100V, 5%, 120 pF	MuRata	GRM1885C2A121JA01D
1	C13	Cap, X7R, 0603, 50V, 10%, 1.0 nF	Kemet	C0603C102K5RACTU
1	C14	Cap, X7R, 0603, 50V, 10%, 22 nF	Kemet	C0603C223K5RACTU
1	D1	Diode, ZNR, SOT23, 15V, 5%	OnSemi	BZX84C15LT1G
2	D2, D13	Diode, SCH, SOD123, 40V, 120 mA	NXP	BAS40H
4	D3, D4, D8, D9	Diode, FR, SOD123, 200V, 1A	Rohm	RF071M2S
1	D10	Diode, FR, SMB, 400V, 1A	OnSemi	MURS140T3G
1	D11	IC, SHNT, ADJ, SOT23, 2.5V, 0.5%	TI	TL431BIDBZR
1	D12	TVS, VBR = 144V	Fairchild	SMBJ130CA
1	R1	Resistor, 0603, 1%, 280 kΩ	Panasonic	ERJ-3EKF2803V
1	R2	Resistor, 1206, 1%, 100 kΩ	Panasonic	ERJ-8ENF1003V
1	R3	Resistor, 1210, 5%, 1.8Ω	Panasonic	ERJ-14RQJ1R8U
1	R4	Resistor, 0603, 1%, 576 kΩ	Panasonic	ERJ-3EKF5763V
1	R5	Resistor, 1206, 1%, 1.00 kΩ	Panasonic	ERJ-8ENF1001V
2	R6, R7	Resistor, 0805, 1%, 1.00 MΩ	Rohm	MCR10EZHF1004
2	R8, R10	Resistor, 1206, 0.0Ω	Yageo	RC1206JR-070RL
1	R9	Resistor, 1812, 0.0Ω		
1	R11	Resistor, 0603, 0.0Ω	Yageo	RC0603JR-070RL
1	R12	Resistor, 0603, 1%, 33.2 kΩ	Panasonic	ERJ-3EKF3322V
1	R13	Resistor, 0603, 1%, 2.0 kΩ	Panasonic	ERJ-3EKF2001V
1	R14	Resistor, 0805, 1%, 3.3 MΩ	Rohm	MCR10EZHF3304
1	RT1	Thermistor, 120V, 1.1A, 50Ω @ 25°C	Thermometrics	CL-140
2	Q1, Q2	XSTR, NFET, DPAK, 300V, 4A	Fairchild	FQD7N30TF
1	Q3	XSTR, PNP, SOT23, 300V, 500 mA	Fairchild	MMBTA92
1	Q5	XSTR, NFET, SOT23, 100V, 170 mA	Fairchild	BSS123
1	J1	Terminal Block 2 pos	Phoenix Contact	1715721
1	F1	Fuse, 125V, 1,25A	bel	SSQ 1.25

Physical Dimensions inches (millimeters) unless otherwise noted

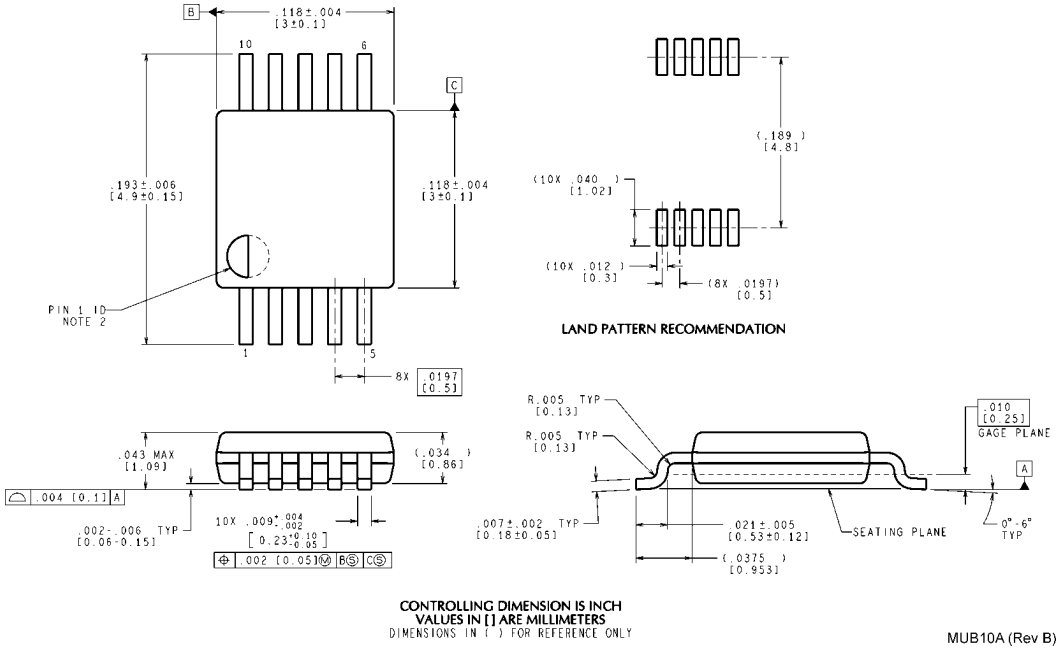

MSOP-10 Pin Package (MM)
For Ordering, Refer to Ordering Information Table
NS Package Number MUB10A

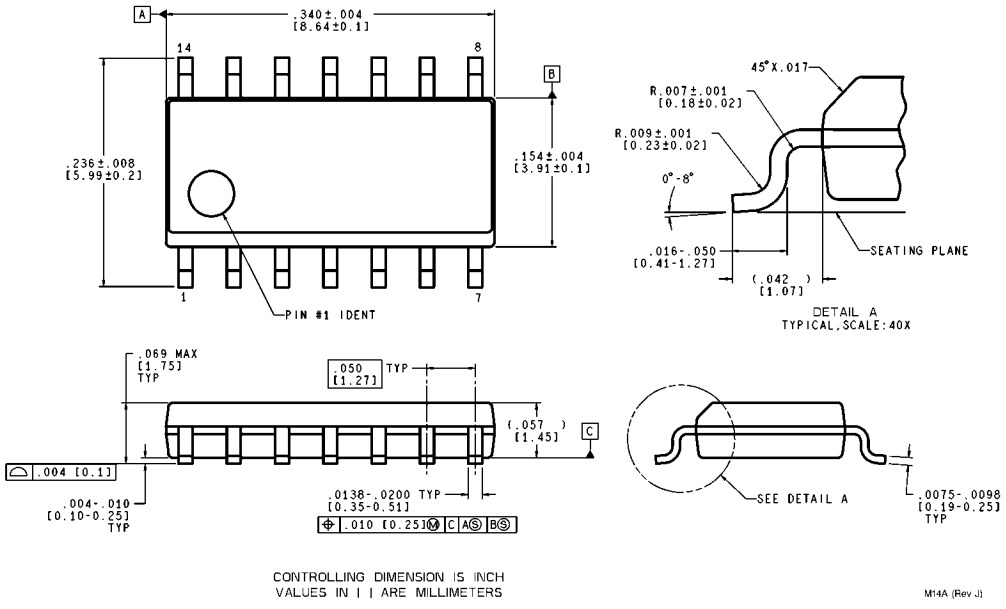

SOIC-14 Pin Package (M)
For Ordering, Refer to Ordering Information Table
NS Package Number M14A

Notes

For more National Semiconductor product information and proven design tools, visit the following Web sites at:
www.national.com

Products		Design Support	
Amplifiers	www.national.com/amplifiers	WEBENCH® Tools	www.national.com/webench
Audio	www.national.com/audio	App Notes	www.national.com/appnotes
Clock and Timing	www.national.com/timing	Reference Designs	www.national.com/refdesigns
Data Converters	www.national.com/adc	Samples	www.national.com/samples
Interface	www.national.com/interface	Eval Boards	www.national.com/evalboards
LVDS	www.national.com/lvds	Packaging	www.national.com/packaging
Power Management	www.national.com/power	Green Compliance	www.national.com/quality/green
Switching Regulators	www.national.com/switchers	Distributors	www.national.com/contacts
LDOs	www.national.com/ldo	Quality and Reliability	www.national.com/quality
LED Lighting	www.national.com/led	Feedback/Support	www.national.com/feedback
Voltage References	www.national.com/vref	Design Made Easy	www.national.com/easy
PowerWise® Solutions	www.national.com/powerwise	Applications & Markets	www.national.com/solutions
Serial Digital Interface (SDI)	www.national.com/sdi	Mil/Aero	www.national.com/milaero
Temperature Sensors	www.national.com/tempsensors	SolarMagic™	www.national.com/solarmagic
PLL/VCO	www.national.com/wireless	PowerWise® Design University	www.national.com/training

THE CONTENTS OF THIS DOCUMENT ARE PROVIDED IN CONNECTION WITH NATIONAL SEMICONDUCTOR CORPORATION ("NATIONAL") PRODUCTS. NATIONAL MAKES NO REPRESENTATIONS OR WARRANTIES WITH RESPECT TO THE ACCURACY OR COMPLETENESS OF THE CONTENTS OF THIS PUBLICATION AND RESERVES THE RIGHT TO MAKE CHANGES TO SPECIFICATIONS AND PRODUCT DESCRIPTIONS AT ANY TIME WITHOUT NOTICE. NO LICENSE, WHETHER EXPRESS, IMPLIED, ARISING BY ESTOPPEL OR OTHERWISE, TO ANY INTELLECTUAL PROPERTY RIGHTS IS GRANTED BY THIS DOCUMENT.

TESTING AND OTHER QUALITY CONTROLS ARE USED TO THE EXTENT NATIONAL DEEMS NECESSARY TO SUPPORT NATIONAL'S PRODUCT WARRANTY. EXCEPT WHERE MANDATED BY GOVERNMENT REQUIREMENTS, TESTING OF ALL PARAMETERS OF EACH PRODUCT IS NOT NECESSARILY PERFORMED. NATIONAL ASSUMES NO LIABILITY FOR APPLICATIONS ASSISTANCE OR BUYER PRODUCT DESIGN. BUYERS ARE RESPONSIBLE FOR THEIR PRODUCTS AND APPLICATIONS USING NATIONAL COMPONENTS. PRIOR TO USING OR DISTRIBUTING ANY PRODUCTS THAT INCLUDE NATIONAL COMPONENTS, BUYERS SHOULD PROVIDE ADEQUATE DESIGN, TESTING AND OPERATING SAFEGUARDS.

EXCEPT AS PROVIDED IN NATIONAL'S TERMS AND CONDITIONS OF SALE FOR SUCH PRODUCTS, NATIONAL ASSUMES NO LIABILITY WHATSOEVER, AND NATIONAL DISCLAIMS ANY EXPRESS OR IMPLIED WARRANTY RELATING TO THE SALE AND/OR USE OF NATIONAL PRODUCTS INCLUDING LIABILITY OR WARRANTIES RELATING TO FITNESS FOR A PARTICULAR PURPOSE, MERCHANTABILITY, OR INFRINGEMENT OF ANY PATENT, COPYRIGHT OR OTHER INTELLECTUAL PROPERTY RIGHT.

LIFE SUPPORT POLICY

NATIONAL'S PRODUCTS ARE NOT AUTHORIZED FOR USE AS CRITICAL COMPONENTS IN LIFE SUPPORT DEVICES OR SYSTEMS WITHOUT THE EXPRESS PRIOR WRITTEN APPROVAL OF THE CHIEF EXECUTIVE OFFICER AND GENERAL COUNSEL OF NATIONAL SEMICONDUCTOR CORPORATION. As used herein:

Life support devices or systems are devices which (a) are intended for surgical implant into the body, or (b) support or sustain life and whose failure to perform when properly used in accordance with instructions for use provided in the labeling can be reasonably expected to result in a significant injury to the user. A critical component is any component in a life support device or system whose failure to perform can be reasonably expected to cause the failure of the life support device or system or to affect its safety or effectiveness.

National Semiconductor and the National Semiconductor logo are registered trademarks of National Semiconductor Corporation. All other brand or product names may be trademarks or registered trademarks of their respective holders.

Copyright© 2010 National Semiconductor Corporation

For the most current product information visit us at www.national.com

National Semiconductor Americas Technical Support Center
Email: support@nsc.com
Tel: 1-800-272-9959

National Semiconductor Europe Technical Support Center
Email: europe.support@nsc.com

National Semiconductor Asia Pacific Technical Support Center
Email: ap.support@nsc.com

National Semiconductor Japan Technical Support Center
Email: jpn.feedback@nsc.com